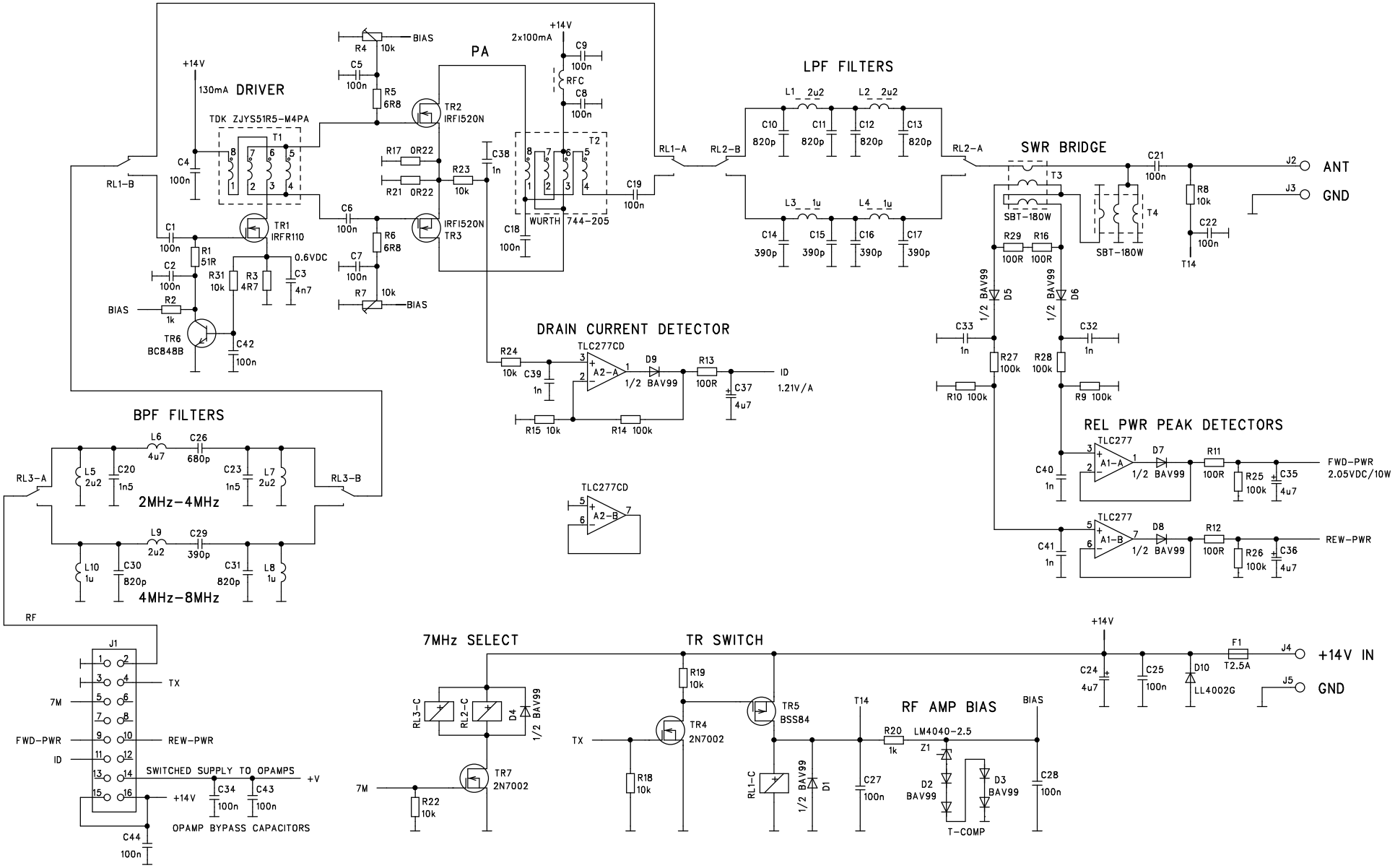

Drawn 2007-06-13	JUMA-TRX2 HF SSB/CW TRANSCEIVER	OH7SV
Design OH7SV	10W POWER AMPLIFIER 80m/40m	Rev A
Sheet 1/1	CIRCUIT DIAGRAM	

Copyright Matti Hohtola OH7SV 2007. This header must appear unaltered in all publications.